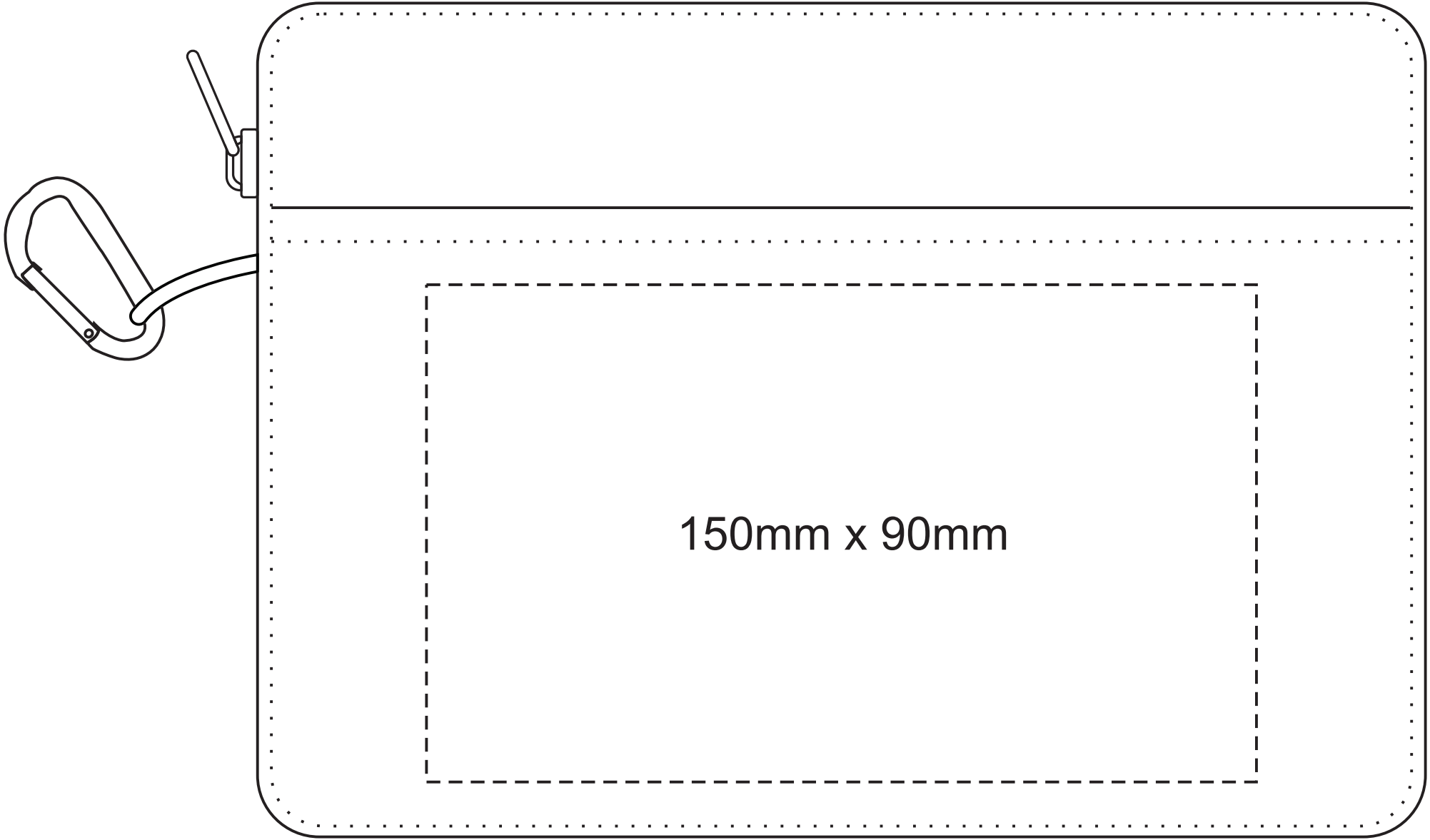
150mm x 90mm